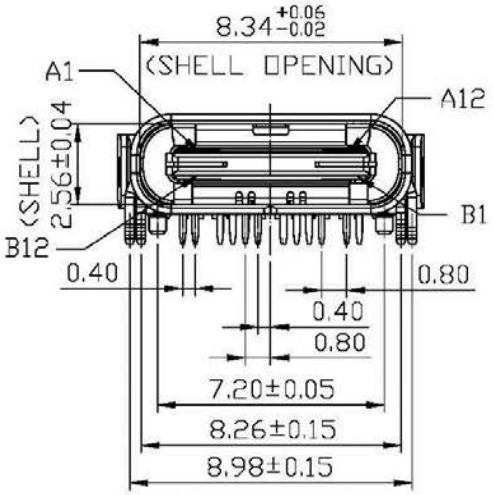

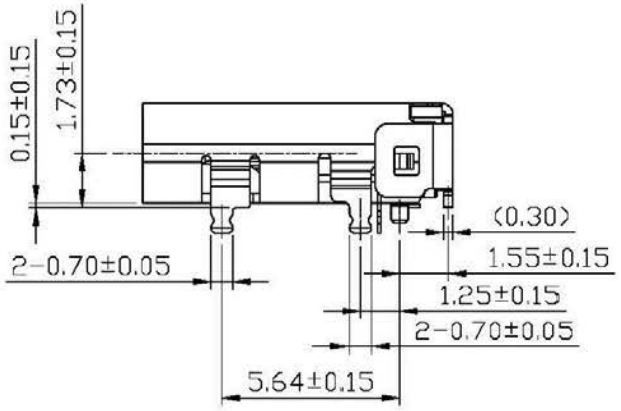

材　質Material：Housing：High temp. thermoplastic. LCP

Contact ：Copper Alloy.

Shell : Stainless steel.

包裝數量Standard Packing：--

配合塑膠Suitable housing: UCM001-10121特B

額定電壓／電流Current Rating：AC/DC --V --A

絕緣阻抗INS. Resistance：--MΩ Min.

耐 電 壓Withstand Voltage：--V AC/1minute.

適用溫度Operation Temp. ：-25°C ~ +85°C

顏　色Color：Housing：黑色(Black)

PIN NUMBER	SIGNAL NAME	PIN NUMBER	SIGNAL NAME
A1	GND	B12	GND
A2	SSTXp1	B11	SSRXp1
A3	SSTXn1	B10	SSRXn1
A4	VBUS	B9	VBUS
A5	CC1	B8	SBU2
A6	Dp1	B7	Dn2
A7	Dn1	B6	Dp2
A8	SBU1	B5	CC2
A9	VBUS	B4	VBUS
A10	SSRXn2	B3	SSTXn2
A11	SSRXp2	B2	SSTXp2
A12	GND	B1	GND

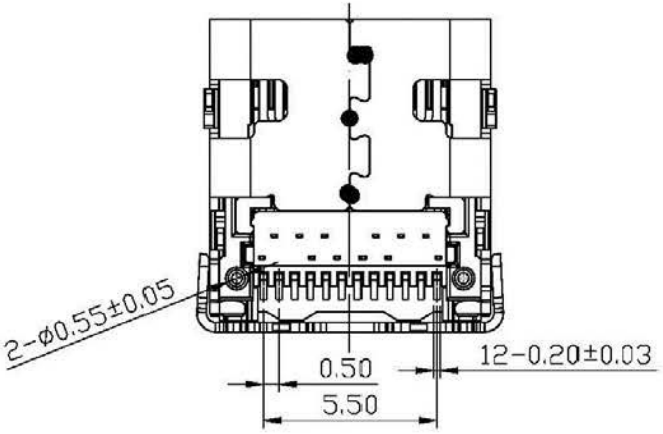

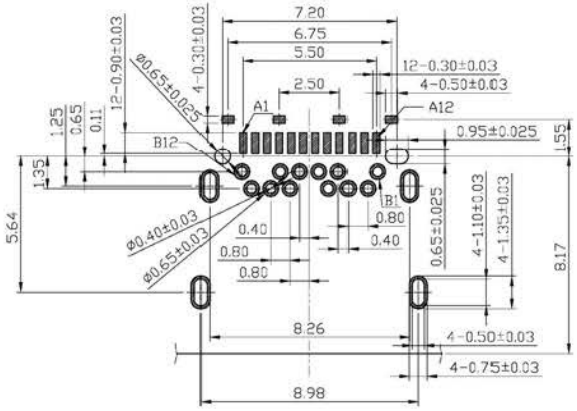

RECOMMENDED PCB LAYOUT

DEFAULT TOLERANCE:±0.05mm

凱帛企業有限公司 KABOE ENTERPRISE CO.,LTD.		
Name USB C 母 SMT+DIP R/A 24PIN 3.1 版		
Drawing No. USB C-1023-2493N		
APPD	-HK-	D-R
General Tolerances : -X.XX± X.X±	Unit : mm	Scale : ROM

THIS DRAWING CONTAINS INFORMATION THAT IS PROPRIETARY TO KABO ENTERPRISE LTD. AND SHOULD NOT BE USED WITHOUT WRITTEN PERMISSION..